City of Brisbane
Subcommittee Report

TO: City Councilmembers Liu and O'Connell

FROM: Community Development Director and Special Assistant

SUBJECT: Ordinance No. 576 (Zoning Text Amendment RZ-5-11) to Amend Brisbane Municipal Code Title 17 Regarding Garage/Carport Minimum Setbacks and Height Limits in the R Residential Districts, Off-Street Parking Regulations, and Alteration/Expansion of Nonconforming Structures

DATE: For January 16, 2014 Planning Issues Subcommittee Meeting

At the previous meeting, the Subcommittee raised a number of questions and concerns:

1. How would "bedrooms" be defined for the residential parking requirements in Section 17.34.020.A?

   The parking requirements for duplex and multiple-family units have been based upon number of bedrooms for years without the apparent need to define "bedroom." Not only does the Municipal Code leave the term undefined; it is not even used in the California Building Code, which uses, instead, the phrase "sleeping accommodations," defined as "rooms intended and designed for sleeping." In practice, staff has relied upon the layout of rooms and typically the presence of a closet to identify bedrooms. For single-family dwellings, with their "dens," "home offices" and similar rooms, it may be more complicated to predict which rooms will actually be used as bedrooms.

   The proposed ordinance would only count bedrooms in determining the parking requirement for single-family dwellings that do not have more than 1 bedroom and not more than 900 sq. ft. of floor area. Given the difficulty in defining "bedroom" (see attached), the Planning Commission, during its lengthy study sessions, considered a roundabout approach based upon the Building Code's standards for habitable space--

   Only 1 standard-size space shall be required for units not exceeding 900 sq. ft. and with no more than room at least seventy (70) square feet in area and not less than seven (7) feet in any plan dimension and located along an exterior wall, other than a living room, a kitchen, a dining room in proximity to the kitchen, bathrooms, and a laundry room.

   Note that this language would not have actually used the term "bedroom," so as to avoid arguments over whether or not a room was actually intended to be used for sleeping. Instead, it would have obliquely addressed bedrooms through a process of elimination,

but as result would have lumped dens, home offices, libraries and similar rooms in with bedrooms in determining the parking requirements. The Planning Commission concluded that by limiting the situations in which the number of bedrooms would be counted for single-family dwellings, a simpler approach would suffice--

Single-family dwellings and group care homes--

Studio or 1-bedroom dwellings not more than 900 square feet in floor area:

1 off-street space (uncovered or covered)

All other dwellings not exceeding 1,800 square feet in floor area:

1 off-street space plus 1 space which shall be in a garage or carport

Dwellings exceeding 1,800 square feet in floor area on lots having less than 37.5 feet in frontage:

2 off-street spaces plus 1 space which shall be in a garage or carport

Dwellings exceeding 1,800 square feet in floor area on lots of 37.5 feet frontage or greater:

2 on-street or off-street spaces plus 2 spaces which shall be in a garage or carport

2. How can Section 17.34.030.D be revised to clarify the different expectations regarding guest parking for multiple family unit complexes as compared to single-family dwelling subdivisions. Does it need to be addressed somewhere in the BMC that there should be no net loss to existing public on-street parking in providing parking bays that might be located partially on private property (and thus would be private parking)?

To supplement the parking spaces required for all dwelling units, Section 17.34.020.A requires that an additional space be provided for every 5 units in residential subdivisions of 5 or more lots or multifamily developments of 5 or more units. As stated at the beginning of that section, this required parking must be provided on-site, except that Section 17.34.050.H.2 allows on-street parking spaces located entirely within the public right-of-way may be recognized as the guest parking required for residential subdivisions.

Thus, guest parking for multiple family unit complexes must be on-site, and per Section 17.34.030.D this parking must be posted by the owner as being available for 72-hour maximum use by the guest only of all of the residential units for which they are required. There is nothing, though, in the proposed ordinance that would prohibit providing the guest parking required for single-family residential subdivisions on-site, as long as it is properly posted. Because enforcement in such situations might be more complicated, since the guest parking space for 5 houses could be located on just one house's property, it might be advisable to require that these guest spaces be public spaces:

17.34.020.A. . Additional guest parking spaces shall be provided for all residential subdivisions of 5 (five) or more single-family residences, at the rate of 1 parking space for every 5 (five) units, with no parking spaces required for any fractional remainders. Such spaces shall be located entirely within the public right-of-way. Any accessible parking spaces required per Section 17.34.040.D shall count as guest parking spaces.

17.34.030.D. Guest parking spaces required for multiple family developments shall be posted by the property owner as available for "2-hour maximum use by the guests only of all residential units for which they are required.

Most likely, any future 5-lot subdivisions will be located within the Brisbane Acres, where streets are too narrow to provide any existing acceptable on-street parking. It would be expected that the streets would have to be improved to the 20 ft. minimum required width, with parking bays providing any required on-street parking. Note that per Section 17.34.050.H.1.c, parking that partially encroaches within the public right-of-way may only be recognized if the parking space is "located so as to minimize its impact upon any existing on-street parking, so as to produce a net increase in the number of on- and off-street parking spaces."

3. If providing a deeper garage for a new house on a steep slope would result in additional grading on up-slope sites or additional building height on down-slope sites, how will the findings required to grant Use Permits to modify the parking regulations (Section 17.34.050.I) work to reduce the 20 ft. minimum interior depth requirement (Section 17.34.040.G.1)?

Under the proposed ordinance, the Planning Commission would be required to make 3 findings in order to grant a Use Permit to reduce the required 20 ft. interior depth for a new garage:

1. Strict enforcement of the specified regulation is not required by either present or anticipated future traffic volume or traffic circulation on the site; and
2. The granting of the use permit will not create or intensify a shortage of on-street parking spaces, given, for example, the availability of existing or improved on/off-street parking which may not fully meet the requirements of this chapter.
3. Full compliance with the parking requirements is not reasonably feasible due to existing structural or site constraints.

One such "site constraint" could be a steep slope that would make it unreasonable to require the additional garage depth.

4. Should an additional tier for larger houses be included in the parking requirements for single-family dwellings?

The current Zoning Ordinance requires no more than 4 parking spaces for single-family dwellings.

The draft ordinance originally considered at the Commission's first public hearing proposed higher requirements of 5 spaces for 3-bedroom dwellings over 3,600 sq. ft. in floor area or 4-bedroom dwellings not over 4,500 sq. ft. in floor area, and 6 parking spaces for 4-bedroom dwellings over 4,500 sq. ft. in floor area or dwellings with 5 or more bedrooms regardless of floor area.

The basis for the 900 ft. increments between tiers was originally derived from the current parking requirement of 2 spaces for 25 ft. lots, which at 2,500 sq. ft. would be allowed a maximum floor area of 1,800 sq. ft. under the 0.72 maximum permitted floor area ratio. This translates to 1 space per 900 sq. ft. of floor area. This ratio was generally supported by U.S. Census Bureau data and parking surveys conducted at the Ridge.

Parking demand information specifically regarding dwellings over 3,600 sq. ft., though, is hard to come by. Reportedly, there are only 9 dwelling units in Brisbane that exceed 3,600 sq. ft. in floor area, which is the maximum allowed under the 0.72 FAR for a standard 5,000 sq. ft. site. Counts of vehicles parked at these larger homes found the apparent demand for more than 4 parking spaces sporadically at four of the nine addresses.

VEHICLES PARKED AT HOUSES AT LEAST 3,600 SQ. FT. IN FLOOR AREA (2011)

ADDRESS	FLOOR AREA (SQ. FT.)*	BEDROOMS	3-DAY AVERAGE NUMBER OF PARKED CARS
51 Mariposa Street	4,722	4	2-car garage: unknown driveway: 3 (max. 4) off-street: 0.67 (max 1)
276 Sierra Point Road	4,495	3	2-car garage: unknown driveway: 0 off-street: 1.67 (max 2)
4050 Bayshore Boulevard	4,462	4	3-car garage: unknown driveway: 0.67 (max 1)
728 Humboldt Road	4,230	3	3-car garage: unknown driveway: 0.33 (max 1)
100 Kings Road	4,159	4	2-car garage: unknown driveway: 0 off-street: 2 (max 3)
325 Humboldt Road	4,071	4	2-car garage: unknown driveway: 0.33 (max 1)
201 Tulare Street	3,996	5	2-car garage: unknown driveway: 0.33 (max 1) off-street: 1 (max 2)
90 Santa Clara Street	3,955	5	2-car garage: unknown driveway: 0.67 (max 1) off-street: 1.67 (max 2)
215 Tulare Street	3,652	5	2-car garage: unknown driveway: 0.67 (max 2) off-street: 1.33 (max 2)

*excluding up to 400 sq. ft. of garage/carport per draft ordinance

At the public hearings on December 8, 2011 and February 9 & 23, 2012, comments were received that the proposed parking requirements were excessive for large dwellings, in that they would require more parking spaces than did the current standards. It was also noted how difficult it would be to provide 5 or more off-street parking spaces on the steep sites that are currently vacant.

In response, the Planning Commission refocused the purpose of the ordinance to specifically achieve the Housing Element's Goal H.I to "avoid unreasonable government constraints to the provision of housing" and to follow the approach recommended for secondary dwelling units per Housing Element Program H.I.1.c to encourage smaller, more affordable units. Accordingly, the ordinance finally recommended by the Planning Commission basically retains the current parking requirements based upon lot frontage, with reduced parking requirements for dwellings generally not over 1,800 sq. ft. in floor area.

5. Regarding the new requirements for on-site turnaround capacity (Section 17.34.040.I), the parking for buildings with 3 or more units should be designed so cars would not back into the lower part of Visitacion Avenue and Old County Road, with an exemption for existing buildings.

According to the attached, Visitacion Avenue (within the NCRO-2 District) and Old County Road are designated as collector streets, so on-site turnaround capability would be required. It might be clearer to revise Section 17.34.040.I to identify those situations in which on-site turnaround capability is required, rather than specify the exceptions. Existing buildings would be exempt from this requirement per Section 17.34.050.A, which could be cross-referenced in this section.

I. On-site turnaround. 1. Off-street parking facilities shall be designed to provide on-site turnaround capability~~, with the following exceptions:~~

~~a. The parking spaces~~ for a single-family residence, secondary dwelling unit or duplex ~~may be designed to back into a non-~~ with driveway access on any arterial street.

~~b. The parking spaces~~

2. Off-street parking facilities shall be designed to provide on-site turnaround capability for a complex of three or more units with driveway access on any ~~may be designed to back into a local street that is not an~~ arterial or a collectorstreet.

3. ~~2.~~ On-site turnaround capability shall be designed so as not to conflict with required parking spaces, including any recognized tandem spaces.

4. Dwelling units existing as of __ [the date this section takes effect] shall be exempt from this requirement per Section 17.34.050.A.

For the remainder of the subjects addressed by the proposed ordinance, please refer to the report for the November 20, 2013 meeting.

Attachments:

Examples of Bedroom Definitions
Figure VI-C from 1994 General Plan Background Report TR-2

EXAMPLES OF BEDROOM DEFINITIONS

Sonoma County :

Bedroom: any space in the conditioned area of a dwelling unit or accessory structure which is 70 square feet and greater in size and which is located along an exterior wall, but not including the following: hall; bathroom; kitchen; living room (maximum of one per dwelling unit); dining room (in proximity to kitchen, maximum of one per dwelling unit); family room (maximum of one per dwelling unit), laundry room, closet/dressing room opening off of a bedroom. The Director of PRMD or his/her designee may grant exceptions if a room, by its design, cannot function as a bedroom. Sewing rooms, dens, studios, lofts, game rooms, and any other conditioned room along an exterior wall which is 70 square feet or greater in size will be considered to be bedrooms unless the room is specifically exempted. If a home office, library or similar room is proposed, it may be exempted from being considered a bedroom if there is no closet and at least one of the following is present: a) permanently built-in bookcases, desks and other feature that encumber the room in such a way that it cannot be used as a bedroom; b) a minimum 4 foot opening, without doors, into another room; or c) a half wall (4 foot maximum height) between the room and another room. A detached building which contains only a half bath will not routinely be considered as having a bedroom unless it is specifically identified and permitted as a guest house.

(http://www.sonoma-county.org/prmd/docs/policies/1-4-1.pdf)

City and County of San Francisco:

According to the 2010 California Building Code, a bedroom is defined as a sleeping unit. Specifically, a bedroom is: A room or space in which people sleep, which can also include permanent provisions for living, eating, and either sanitation or kitchen facilities but not both. Such rooms and spaces that are also part of a *dwelling unit* are not sleeping units. [2010 California Building Code, Title 24, Part 2, Volume 1, Section 202]. In Planning Code Section 102.29, a bedroom is defined as "a 'sleeping room' as defined in the Building *Code." Zoning Administrator Bulletin No. 7 - Planning Code Interpretations for the Eastern Neighborhoods* further clarifies the definition of bedroom as any room which meets all of the following criteria and which is subsequently determined by the Department of Building Inspection (DBI) to meet applicable Building and Housing Code standards:

(1) Contains at least 70 square feet, exclusive of closets, bathrooms, or similar spaces;
(2) Has at least one window opening to an area which leads either to a street or rear yard space; and,
(3) Is clearly labeled as a 'bedroom' on submitted plans.

(http://sf-planning.org/ftp/files/LOD/2011/616%2020th%20Street%20-%20Revised%206-21-2011.pdf)

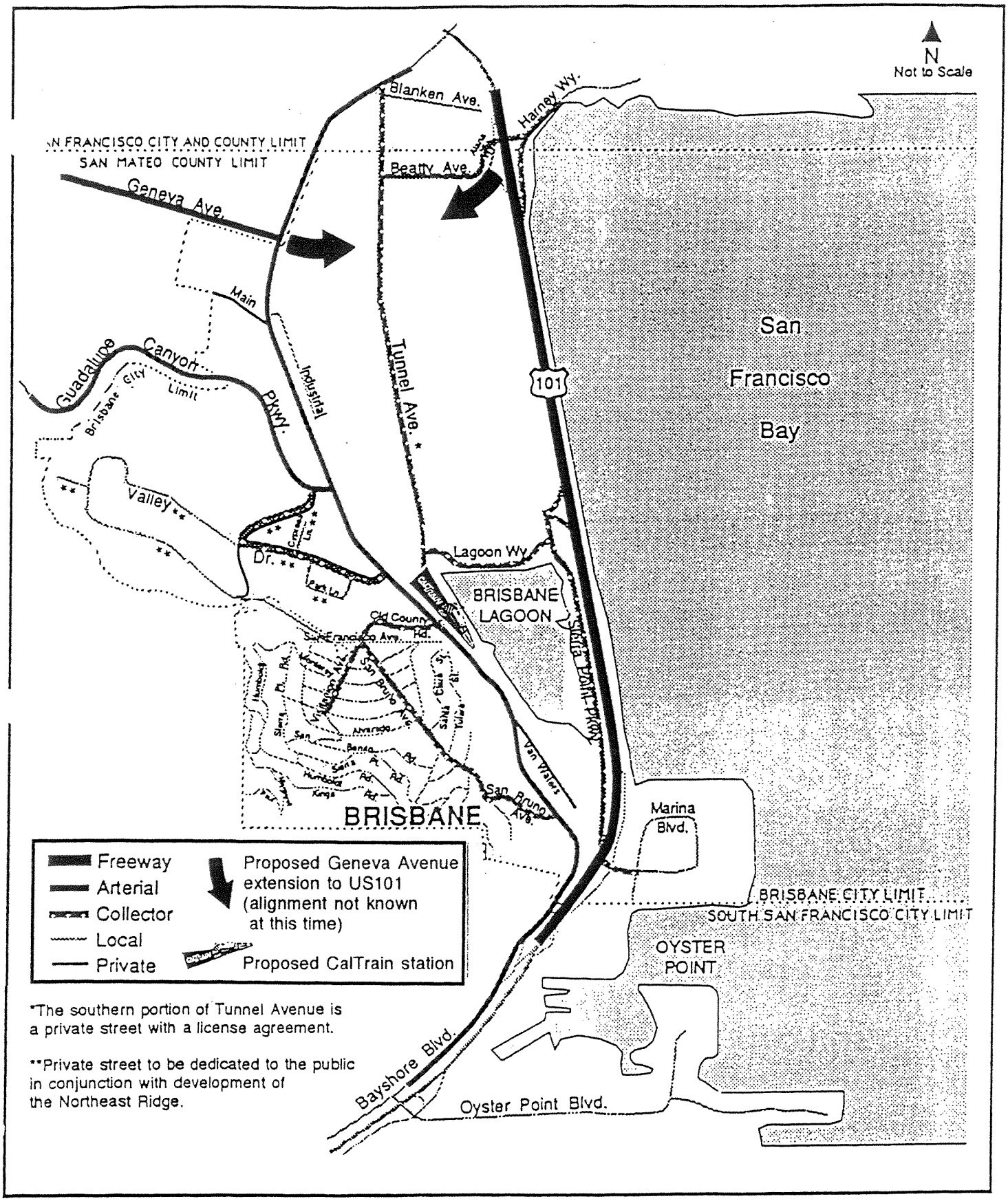

FIGURE VI-C	PROPOSED TRANSPORTATION & CIRCULATION IMPROVEMENTS	Source: TR-2

City of Brisbane
Subcommittee Report

TO: City Councilmembers Liu and O'Connell

FROM: Community Development Director and Special Assistant

SUBJECT: Ordinance No. 576 (Zoning Text Amendment RZ-5-11) to Amend Brisbane Municipal Code Title 17 Regarding Garage/Carport Minimum Setbacks and Height Limits in the R Residential Districts, Off-Street Parking Regulations, and Alteration/Expansion of Nonconforming Structures

DATE: For March 26, 2014 Planning Issues Subcommittee Meeting

At the November 20, 2013 meeting, the Subcommittee raised a number of questions and concerns. In response to the follow-up discussion at the January 16, 2014 meeting, additional information is provided:

1.a. How would "bedroom" be defined for the parking requirements for "Studio or 1-bedroom dwellings not more than 900 square feet in floor area" in Section 17.34.020.A? What would be the implications of resolving this issue by deleting the reference to bedrooms altogether and simply requiring 1 parking space for 900 sq. ft. units?

The draft ordinance recommended by the Planning Commission did not define "bedroom" and, instead, relied upon past practice in identifying bedrooms based upon the layout of rooms and typically the presence of a closet. Given the difficulties in attempting to define "bedroom" (see attached), the Commission had also considered the alternative of a roundabout approach based upon the Building Code's standards for habitable space--

Only 1 standard-size space shall be required for units not exceeding 900 sq. ft. and with no more than room at least seventy (70) square feet in area and not less than seven (7) feet in any plan dimension and located along an exterior wall, other than a living room, a kitchen, a dining room in proximity to the kitchen, bathrooms, and a laundry room.

The proviso that 1 parking space would only be required for 900 sq. ft. dwellings if they contained no more than 1 bedroom came from the Commission's concerns that small units could contain multiple bedrooms generating higher demand for parking. Available data regarding number of bedrooms and floor area for 728 single-family residences in the R-1 District (representing over one-third of the 1,934 total units identified in the 2010 U.S. Census) found 3-bedroom dwellings as small as 570 sq. ft.; although, the average 3-bedroom unit was 1,621 sq. ft.

UNIT SIZE FOR 728 SINGLE-FAMILY RESIDENCES				
Number of Bedrooms	Number of Units	Floor Area (Sq. Ft.)		
		Average	Range	
			Low	High
1	71 (10%)	760	420	1,913
2	294 (40%)	1,063	430	3,210
3	276 (38%)	1,621	570	4,499
4	67 (9%)	2,164	1,130	4,071
5	20 (3%)	3,066	1,760	4,255

Among the secondary dwelling units approved by the City (see attached), the one 3-bedroom unit was more than 900 sq. ft., but the average floor area of the 2-bedroom units was 869 sq. ft.

Even so, available data also found vehicle per bedroom ratios to be less than 1. Parking counts taken at Altamar at the Ridge found the average number of parked vehicles per bedroom to be only 0.58.

ALTAMAR PARKING SURVEY	
DATE/TIME	PARKED VEHICLES
Wednesday, July 24, 2002, 7:00 p.m.	233
Wednesday, January 15, 2003, 7:15 p.m.	277
Wednesday, April 14, 2004,7:00 p.m.	234
Wednesday, June 15, 2011, 7:15 p.m.	276
AVERAGE	255

ALTAMAR UNITS SIZES			
TYPE OF UNIT	NUMBER OF UNITS	SQ. FT.	TOTAL BEDROOMS
2-bedroom	51	1,070	102
2-bedroom	42	1,243	84
1-bedroom + den	21	1,280	21
2-bedroom + den	29	1,520	58
3-bedroom	29	1,520	87
2-bedroom + den	42	1,663	84
TOTAL	214	291,662	436

Extrapolating from the results of the 2006-2010 American Community Survey conducted by the U.S. Census Bureau, the average household in Brisbane had at least 1.76 vehicles (+/-8.6% margin of error), and the average dwelling unit had a least 2.31 bedrooms, so the average number of vehicles per bedroom would be approximately 0.76. Similar

extrapolations from earlier U.S. Census data found an average of approximately 0.72 vehicles per bedroom in Brisbane in 1990 and 0.77 in 2000. Thus, a two-bedroom dwelling, regardless of floor area, might be expected to generate a demand for approximately 1.44-1.54 vehicles. Based upon these results, the Commission felt more comfortable recommending a requirement of 1 parking space only for those units no more than 900 sq. ft. in floor area with no more than 1 bedroom.

1.b. If one built a 900 sq. ft. 1-bedroom unit with the required 1 parking space and later converted it to 2 bedrooms without increasing the floor area, would additional parking be required? Could such a conversion be allowed under the 400 sq. ft. exception?

Presumably, the conversion would require a Building Permit which could not be issued without compliance with the Zoning Ordinance's parking requirements. Under the proposed parking requirements, converting a 1-bedroom single-family dwelling not more than 900 sq. ft. in floor area into a 2-bedroom dwelling would require providing 2 off-street spaces (1 in a garage or carport), except that Section 17.34.050.B states:

B. An existing single-family dwelling or mobilehome which does not have off-street parking facilities that conform with the requirements of this chapter may be expanded by a cumulative total of not more than four hundred (400) square feet of floor area without the need to bring the parking facilities into conformance or to obtain a use permit under Section 17.34.050.I of this chapter; furthermore, such a single-family dwelling or mobilehome may be expanded to a total floor area of not more than one-thousand two-hundred (1,200) square feet, if the total number of bedrooms does not exceed two. The following restrictions and requirements shall apply:

1. The structure to be expanded shall constitute the principal structure and the only dwelling unit located on the site or mobilehome park space.

2. The square footage permitted by this section shall be reduced by the square footage of any prior expansion of the same structure that was made since January 1, 1986, regardless of whether an exception, use permit, variance, or other approval was granted for such prior expansion.

3. The square footage permitted by this section shall be reduced by the square footage of any prior permitted expansion of the same structure which resulted in the loss of required parking spaces, such as the conversion of a garage to living area.

4. The expansion shall not result in the loss of any existing required off-street parking spaces that would increase the nonconformity of the existing off-street parking facilities.

5. The proposed development shall comply with the requirements of Section 17.01.060 of this title, unless: (a) the structure to be expanded is located upon a lot of record, and (b) a public street abutting such lot of record provides the principal means of access to that lot.

6. The total floor area shall not exceed the maximum permitted under the floor area ratio regulations for the applicable district, including or excluding covered parking as provided under those regulations.

7. See Section 17.34.020.B.1 regarding garage and carport exclusions from the floor area calculation.

To address this apparent loophole, the first line of Section 17.34.050.B should be revised to read:

B. ~~An existing~~ *A* single-family dwelling or mobilehome *existing as of ____ [the date this section takes effect]* which does not have off-street . . .

2. Is the ratio of 1 additional guest parking space for every 5 units, either in a residential subdivision of 5 or more units or a multiple family dwelling development of 5 or more units, sufficient? Should the provision that no guest spaces would be required for any fractional remainders be deleted?

The 1:5 ratio recommended by the Planning Commission (see attached Guest Parking Analysis) was slightly less than the average for multiple-family developments found in surveys of jurisdictions throughout the state (only 4 cities surveyed include a requirement for guest parking for single-family residences; most of those require that each residence have only 2 non-guest spaces).

If the exception for fractional remainders were eliminated, Section 17.34.020.B.4 would require that any fractions be rounded up from 0.5. Thus, 1 guest space would be required for developments of 5 to 7 units, 2 guest spaces would be required for 8 to 12 units, etc.

Note the following clarifications that were recommended at the January 16th meeting:

17.34.020.A. ...Additional guest parking spaces shall be provided for all residential subdivisions of 5 (five) or more single-family residences, at the rate of 1 parking space for every 5 (five) units, with no parking spaces required for any fractional remainders. Such spaces shall be located entirely within the public right-of-way and available for public use. Any accessible parking spaces required per Section 17.34.040.D shall count as guest parking spaces.

17.34.030.D. Guest parking spaces required for multiple family developments shall be posted by the property owner as available for 72-hour maximum use by the guests only of all residential units for which they are required.

3. a. If providing a deeper garage for a new house on a steep slope would result in additional grading on up-slope sites or additional building height on down-slope sites, how will the findings required to grant Use Permits to modify the parking regulations (Section 17.34.050.I) work to reduce the 20 ft. minimum interior depth requirement (Section 17.34.040.G.1)?

New garages on steep sites where providing the extra depth would be more difficult could be granted a Use Permit to modify the parking regulations, if the Planning Commission were able to make the required findings, including that the steep slope is a site constraint that would make it unreasonable to require the additional garage depth.

3.b. Will the proposed changes to the front setbacks for garages make it more difficult to build?

Under the current Zoning Ordinance, on blocks where the average existing setback is less than the standard, the required setback may be reduced to that average (BMC Section 17.06.040.D.2), as long as that is not closer than 20 ft. to the far side of the improved street (BMC Section 17.34.020.B). Under the recommended ordinance, to reduce the setback for garages or carports to less than 10 ft. would require the City Engineer to determine that the lesser distance is safe in terms of pedestrian and vehicular traffic. This approach would be consistent with the current exceptions to the setback requirements provided in BMC Section 17.32.070.A.3.a, as well as with the height restrictions for walls and fences in BMC Section 17.32.050.A.1.a. The recommended ordinance would also eliminate the conflicting requirement that the front setback for garages and carports be 20 ft. (BMC Section 17.34.020.C).

4. Should an additional tier for larger houses be included in the parking requirements for single-family dwellings?

The Planning Commission considered higher requirements of 5 spaces for 3-bedroom dwellings over 3,600 sq. ft. in floor area or 4-bedroom dwellings not over 4,500 sq. ft. in floor area, and 6 parking spaces for 4-bedroom dwellings over 4,500 sq. ft. in floor area or dwellings with 5 or more bedrooms regardless of floor area. The parking surveys conducted by staff, though, found the apparent demand for more than 4 parking spaces at the 9 houses in Brisbane over 3,600 sq. ft. to only occur sporadically at less than half of the houses.

At the Commission's public hearings, comments were received that the proposed parking requirements were excessive for large dwellings, in that they would require more parking spaces than do the current standards, and that the remaining vacant sites are too steep to fit 5 or more parking spaces.

In response, the Planning Commission refocused the purpose of the ordinance to specifically achieve the Housing Element's Goal to "avoid unreasonable government constraints to the provision of housing" and to follow Housing Element Program H.I.1.c's approach to encourage smaller, more affordable units.

5. Regarding the new requirements for on-site turnaround capacity (Section 17.34.040.I), the parking for buildings with 3 or more units should be designed so cars would not back into the lower part of Visitacion Avenue and Old County Road, with an exemption for existing buildings.

According to the attached figure form the General Plan Background Report, Visitacion Avenue (within the NCRO-2 District) and Old County Road are designated as collector streets, so on-site turnaround capability would be required. It might be clearer to revise Section 17.34.040.I to identify those situations in which on-site turnaround capability is required, rather than specify the exceptions. Existing buildings would be exempt from

this requirement per Section 17.34.050.A, which could be cross-referenced in this section.

1. On-site turnaround. 1. Off-street parking facilities shall be designed to provide on-site turnaround capability~~, with the following exceptions:~~

~~a. The parking spaces~~ for a single-family residence, secondary dwelling unit or duplex ~~may be designed to back into a non-~~ with driveway access on any arterial street.

~~b. The parking spaces~~

2. Off-street parking facilities shall be designed to provide on-site turnaround capability for a complex of three or more units with driveway access on any ~~may be designed to back into a local street that is not an~~ arterial or ~~a~~ collectorstreet.

3. ~~2.~~ On-site turnaround capability shall be designed so as not to conflict with required parking spaces, including any recognized tandem spaces.

4. Dwelling units existing as of __ [the date this section takes effect] shall be exempt from this requirement per Section 17.34.050.A.

For the remainder of the subjects addressed by the proposed ordinance, please refer to the report for the November 20, 2013 meeting.

Attachments:

Examples of Bedroom Definitions
Approved Secondary Dwelling Units
Guest Parking Analysis
Figure VI-C from 1994 General Plan Background Report TR-2

EXAMPLES OF BEDROOM DEFINITIONS

Sonoma County :

Bedroom: any space in the conditioned area of a dwelling unit or accessory structure which is 70 square feet and greater in size and which is located along an exterior wall, but not including the following: hall; bathroom; kitchen; living room (maximum of one per dwelling unit); dining room (in proximity to kitchen, maximum of one per dwelling unit); family room (maximum of one per dwelling unit), laundry room, closet/dressing room opening off of a bedroom. The Director of PRMD or his/her designee may grant exceptions if a room, by its design, cannot function as a bedroom. Sewing rooms, dens, studios, lofts, game rooms, and any other conditioned room along an exterior wall which is 70 square feet or greater in size will be considered to be bedrooms unless the room is specifically exempted. If a home office, library or similar room is proposed, it may be exempted from being considered a bedroom if there is no closet and at least one of the following is present: a) permanently built-in bookcases, desks and other feature that encumber the room in such a way that it cannot be used as a bedroom; b) a minimum 4 foot opening, without doors, into another room; or c) a half wall (4 foot maximum height) between the room and another room. A detached building which contains only a half bath will not routinely be considered as having a bedroom unless it is specifically identified and permitted as a guest house.

(http://www.sonoma-county.org/prmd/docs/policies/1-4-1.pdf)

City and County of San Francisco:

According to the 2010 California Building Code, a bedroom is defined as a sleeping unit. Specifically, a bedroom is: A room or space in which people sleep, which can also include permanent provisions for living, eating, and either sanitation or kitchen facilities but not both. Such rooms and spaces that are also part of a *dwelling unit* are not sleeping units. [2010 California Building Code, Title 24, Part 2, Volume 1, Section 202]. In Planning Code Section 102.29, a bedroom is defined as "a 'sleeping room' as defined in the Building *Code." Zoning Administrator Bulletin No. 7 - Planning Code Interpretations for the Eastern Neighborhoods* further clarifies the definition of bedroom as any room which meets all of the following criteria and which is subsequently determined by the Department of Building Inspection (DBI) to meet applicable Building and Housing Code standards:

(1) Contains at least 70 square feet, exclusive of closets, bathrooms, or similar spaces;
(2) Has at least one window opening to an area which leads either to a street or rear yard space; and,
(3) Is clearly labeled as a 'bedroom' on submitted plans.

(http://sf-planning.org/ftp/files/LOD/2011/616%2020th%20Street%20-%20Revised%206-21-2011.pdf)

APPROVED SECONDARY DWELLING UNITS

Street	Address	Status	Bedrooms	Floor Area
Alvarado				
	395-A	Constructed	1	380 sq. ft.
	455	Unbuilt	3	955 sq. ft.
Humboldt Rd.				
	645	Constructed	1	471 sq. ft.
	1050	Constructed	1	598 sq. ft.
	1056	Constructed	2	897 sq. ft.
	1122-A	Constructed	1	602 sq. ft.
Kings				
	150	Unbuilt	1	795 sq. ft.
	340	Constructed	1	307 sq. ft.
Klamath				
	432	Constructed	1 + Den	1,000 sq. ft.
San Benito				
	21	Constructed	studio	702 sq. ft.
	37	Constructed	2	683 sq. ft.
	245	Constructed	1	941 sq. ft.
San Diego Ct.				
	2-A	Constructed	1	702 sq. ft.
	7-A	Constructed	2	755 sq. ft.
San Francisco				
	29-A	Constructed	1	882 sq. ft.
Santa Clara				
	281	Constructed	1	629 sq. ft.
Sierra Point				
	265	Unbuilt	2	882 sq. ft.
Solano				
	110	Unbuilt	2	997 sq. ft.
	201	Constructed	1	895 sq. ft.
Thomas				
	88	Unbuilt	2	998 sq. ft.

GUEST PARKING ANALYSIS

Most cities' residential parking requirements appeared to be based upon the assumption that on-street parking will accommodate the demand for guest parking (out of 241 jurisdictions in California surveyed by Walker Parking Consultants in 2000, only 63 required other than 2 parking spaces per single-family dwelling). A standard 50 ft. wide lot with an 18 ft. wide driveway on a 36 ft. wide street can typically accommodate 1 to 1 ½ on-street parking spaces along its frontage (see Parallel Parking Space Standards in proposed Section 17.34.040.E). Thus, it would appear that these cities actually expect 3 to 3 ½ parking spaces per single-family dwelling. Where streets are too narrow to properly accommodate on-street parking or where on-street parking is already taken by existing residences without conforming parking, that guest parking would have to be provided on site.

Only 4 of the cities surveyed include a requirement for guest parking with their standard for single-family residences:

Laguna Hills:	2 spaces plus 0.3 guest spaces
Larkspur:	2 spaces plus 2 guest spaces
Los Gatos:	2 spaces plus 1 guest space (if more than 2 units total)
Maywood:	2+ spaces (based upon number of bedrooms) plus 0.5 guest spaces

Guest parking is more commonly required for multi-family projects:

2 guest spaces per unit:	2 jurisdictions
2 guest spaces per 3 units:	1 jurisdiction
1 guest space per 1 unit:	6 jurisdictions
1 guest space per 2 units:	12 jurisdictions
1 guest space per 3 units:	15 jurisdictions
1 guest space per 4 units:	38 jurisdictions
1 guest space per 5 units:	19 jurisdictions
1 guest space per 7 units:	3 jurisdictions
1 guest space per 8 units:	2 jurisdictions
1 guest space per 10 units:	2 jurisdictions
1 guest space per 12 units:	1 jurisdiction
1 guest space per 15 units:	1 jurisdiction
+ 10% of resident's spaces:	1 jurisdiction
+ 15% of resident's spaces:	1 jurisdiction
+ 30% of resident's spaces:	1 jurisdiction

The most frequently found standard and the average requirement for those jurisdictions using a per-unit ratio was 1 guest space per 4 units.

An earlier 1995 survey by Walker Parking Consultants of 160 jurisdictions throughout the state provided additional data used in the Commission's analysis. Fifty-six jurisdictions used a flat parking standard for multi-unit dwellings not based upon the number of bedrooms. These ranged from 1 space to 2.5 spaces per unit and averaged 1.875 spaces per unit. Thirty-five of these had an additional guest parking requirement. These ranged from 1 guest space per 15 units to 1 guest

space per unit. Including those of the 56 jurisdictions that required none, the average number of guest spaces per unit was approximately 1 space per 4.5 units.

JURISDICTIONS THAT USE A FLAT-RATE REQUIREMENT
FOR PARKING FOR MULTI-UNIT DWELLINGS

Parking Space Per Unit	Guest Parking Per Unit	Combined Parking Number of Per Unit	Jurisdictions
1	0	1	4
1.5	0	1.5	5
1.5	1/15	1.567	1
1.5	1/3	1.833	1
2	0	2	12
2	1/10	2.1	2
2	1/8	2.125	1
2	1/7	2.143	1
2	1/5	2.2	2
2	1/4	2.25	6
2	1/3	2.333	10
2	1/2.5	2.4	1
2	1/2	2.5	7
2	1/1	3	2
2.5	1/2	3	1
1.875 Average	1/4.5 Average	2.1 Average	56 Total

Before adopting a new guest parking standard, its feasibility should be checked by applying it to local developments. The vast majority of existing four-plus-unit complexes in Brisbane (excluding those at the Northeast Ridge) are, to begin with, nonconforming in terms of unit density under the current applicable zoning regulations. Of the two known to be conforming, the 4-plex at 218-224 Tulare Street has 6 garage spaces and 6 driveway spaces which meets the current requirement of 1.5 garages per 2-bedroom unit and which would provide the 6 spaces (including 4 covered) that would be required for 759 sq. ft. units under the proposed ordinance, with at least 2 additional guest parking spaces available. The 8-unit condominium complex at 737 San Bruno Avenue has the 12 spaces currently required at the rate of 1.5 garages per 2-bedroom unit, but 2 of these are uncovered spaces. As for the recommended standards, these 900-992 sq. ft. units would provide the 12 required spaces (including 8 covered) for the units, but no guest parking would be available.

For the 4-plex approved by the Planning Commission at 661 San Bruno Avenue, the current ordinance requires 6 spaces (1.5 garage spaces per unit). Although 2 of the units would be less than 900 sq. ft. in floor area, all of the units are proposed to contain 2 bedrooms and thus would not benefit from the proposed exception for 1-bedroom units not exceeding 900 sq. ft. Guest parking in this instance would only be available on-street.

For the stacked flats at Altamar at the Ridge, 529 parking spaces were provided for 214 units (an average of 2.6 spaces per unit). Assuming an average of 1,375 sq. ft. per unit (214 units containing a total of 294,181 sq. ft. of living space), the current and proposed standards of 1.5 spaces per unit) would result in a total of 321 spaces. Repeated counts of cars parked at the development found no more than 277 parked cars, indicating no need for additional guest parking if at least 1.5 spaces are provided per unit.

ALTAMAR AT THE RIDGE
PARKING SURVEY

		Occupied			
	Existing	7/24/02*	1/15/03*	4/14/04*	6/15/11*
Parking Spaces	529	233	277	234	276
% Occupied	n/a	44%	52%	44%	52%

*All surveys were conducted on a Wednesday night at 7-7:15 p.m.

Regarding Viewpoint at the Ridge, the Planning Commission had heard complaints in 2004 regarding the lack of sufficient guest parking. This was unexpected, in that more than twice the number of parking spaces that would be required under the current ordinance was provided for this project. Each unit has two garage spaces and, with the exception of only 2 units, two driveway spaces. Guest spaces in parking bays are provided at a ratio of approximately 1 space per 3 units. This comes to an average of 4.34 parking spaces per unit, with the average unit being 1,919 sq. ft. in habitable floor area. Part of the reported parking problem may have been the result of garages being used for purposes other parking and vehicles being too large to fit within the garages (unlike Altamar at the Ridge, all of the Viewpoint at the Ridge units have private garages). Another factor may have been that the guest spaces provided are not proportionately distributed throughout the project. For example, Tanager Court and the upper block of Fox Sparrow Lane have a combined total of 10 guest parking spaces for only 15 units, while Red Hawk Court has only 4 guest parking spaces for 21 units (excluding the 7 spaces designated for the clubhouse at 201 Mission Blue Drive).

VIEWPOINT AT THE RIDGE

Floor Plan	# of Units	Floor Area*	Bed-rooms	Garages + Driveways	Per Current Ordinance
1	38	1,526 sq. ft.	1-2	2+2	1.5 garages
2	38	1,476 sq. ft.	1-2	2+2	1.5 garages
3	19	1,812 sq. ft.	2	2+2	1.5 garages
4	34	2,300 sq. ft.	2-3	2+2	1.5-2 garages
5	12	2,389 sq. ft.	2+loft	2+2	1.5 garages
6	19	2,723 sq. ft.	3-4	2+2	2 garages
TOTAL	160			640	250-267
GUEST PARKING PROVIDED				55**	
GUEST PARKING REQUIRED					0
COMBINED TOTAL				695	250-267

*"Living" square footage plus square footage of garage & stairs in excess of proposed 400 sq. ft. exception (see below)
**Not including 4 parking bay spaces compensating for lack of driveway parking at 111-112 Rock Wren Lane or 7 clubhouse parking spaces

To gauge the demand for guest parking at Viewpoint, staff conducted a count of cars parked in the parking bays at 7:45 p.m. on Wednesday, August 17, 2011. Out of a total of 55 parking spaces, only 39 were occupied. For a total of 160 units, that would average 1 car per 4.1 units. Given the abundance of available driveway parking spaces, it was not possible to determine whether certain units were generating a demand for parking that exceeded their driveway capacity, or whether some people simply prefer to park on street than in their driveways.

Landmark at the Ridge has a combination of parking bays and unmarked on-street parking on streets wide enough to accommodate guest parking on both sides. In 2004, it was estimated that 47 on-street guest parking spaces were provided for the 37 dwellings in Unit 1. That was a ratio of approximately 1 guest space per 0.8 dwelling unit. All combined, there was an average of 5.8 parking spaces per unit, with the average unit containing 2,950-3,037 sq. ft. of floor area (with the higher number reflecting the estimated floor area of the 3-car garages in excess of the proposed 400 sq. ft. exemption, see below).

LANDMARK AT THE RIDGE—UNIT 1

Floor Plan	# of Units	Floor Area	Bed-rooms	Garages + Driveways	Per Draft Ordinance
1	6	2,837 sq. ft.	4	2+2	2+3
2	9	3,078 sq. ft.	5	2+2	2+4
3	12	3,277 sq. ft.*	4-5	3+2	2+3-4
4	6	2,098 sq. ft.*	2-3	3+2	2+1-2
5	2	2,843 sq. ft.	3-4	2+2	2+2-3
6	2	3,416 sq. ft.*	4-5	3+2	2+3-4
TOTAL	37			168	180-202
GUEST PARKING PROVIDED				47	
COMBINED TOTAL				215	

Since 2004, 17 additional houses have been built at Landmark. A count at 8:00 p.m. on Wednesday, August 17, 2011, found a total of 22 cars parked cars parked on the street (including in parking bays). For a total of 54 units, that would average 1 car per 2.5 units. As was noted at Viewpoint, many of the driveways were empty, raising doubts about whether guest parking on the street is necessarily a necessity.

This review raises questions regarding whether additional guest parking is actually needed for larger projects and whether providing guest parking for smaller projects would impact their feasibility. Regarding the minimum number of units subject to the requirement, 5 would parallel the State density bonus provisions (BMC Section 17.31.020.X) for which a modification to the parking standards could then be granted as a density bonus incentive or concession. To be consistent with this threshold, the standard would be 1 guest parking space per every 5 units, which is 1 unit less than the average requirement found in the survey of jurisdictions statewide.

City of Brisbane
Subcommittee Report

TO: Mayor O'Connell and City Councilmember Liu

FROM: Community Development Director and Special Assistant

SUBJECT: Ordinance No. 576 (Zoning Text Amendment RZ-5-11) to Amend Brisbane Municipal Code Title 17 Regarding Garage/Carport Minimum Setbacks and Height Limits in the R Residential Districts, Off-Street Parking Regulations, and Alteration/Expansion of Nonconforming Structures

DATE: For July 1, 2015 Planning Issues Subcommittee Meeting

Below is an accounting of the current status of all of the issues previously raised by the Subcommittee (as numbered in previous reports) regarding the draft parking ordinance amendments recommended by the Planning Commission. For background, please refer to the previous Subcommittee reports, attached.

PENDING:

3.a. Minimum Garage Dimensions vs. Height Limits

The question was asked that, if the recommended ordinance's requirement that a garage for a new house be 20 ft. deep (instead of the current 18 ft.) would result in additional grading on steep up-slope sites or additional building height on steep down-slope sites, how will the findings required to grant Use Permits to modify the parking regulations (Section 17.34.050.I) work to reduce the 20 ft. minimum interior depth requirement (Section 17.34.040.G.1)?

For example, on a 64% slope, the 2 ft. additional depth required (compared to the current minimum 18 ft. garage space depth) could push the garage over the 30 height limit in the R-1 District (Section 17.06.040.G.1.b), as illustrated on the attached cross-section. The 35 ft. height limit in the R-BA District (Section 17.12.040.G) was intended to accommodate the steeper slopes typically found in the Brisbane Acres.

Under the recommended ordinance, the Planning Commission would be required to make 3 findings in order to grant a Use Permit to reduce the required 20 ft. interior depth for a new garage:

1. Strict enforcement of the specified regulation is not required by either present or anticipated future traffic volume or traffic circulation on the site; and

2. The granting of the use permit will not create or intensify a shortage of on-street parking spaces, given, for example, the availability of existing or improved on/off-street parking which may not fully meet the requirements of this chapter.

3. Full compliance with the parking requirements is not reasonably feasible due to existing structural or site constraints.

New garages on steep sites where providing the extra depth would be more difficult could be granted a Use Permit to modify the parking regulations, if the Planning Commission were able to make these required findings, specifically that the steep slope is a "site constraint" that would make it unreasonable to require the additional garage depth.

3.b. Garage Setbacks and Height Limits

The concern was raised that the Planning Commission's recommended changes to the front setbacks for garages could make it more difficult to build.

Under the current Zoning Ordinance, on blocks in the R-1 District where the average existing setback is less than the standard, the required setback may be reduced to that average (BMC Section 17.06.040.D.2), as long as that is not closer than 20 ft. to the far side of the improved street (BMC Section 17.34.020.B) or front property line (BMC Section 17.34.020.C). Under the recommended ordinance, to reduce the setback for garages or carports to less than 10 ft. would require the City Engineer to determine that the lesser distance is safe in terms of pedestrian and vehicular traffic (see following table). This would allow the City Engineer to evaluate sight distance and adequate back-up distance for the garage/carport. Such approval by the City Engineer is already required for the current exceptions to the setback requirements for garages/carports on slopes of 15% or greater provided in BMC Section 17.32.070.A.3.a, as well for the height limit exceptions for walls and fences in BMC Section 17.32.050.A.1.a. This change would only affect those few instances in which the average existing setback for the block is less than 10 ft. and any required parking spaces in the driveway in front of the garage would not already necessitate locating the garage at least 10 ft. from the front property line.

Front Setback	
Current Municipal Code	Recommended Ordinance
15 ft. except:	(no change)
10 ft. where 15% or greater slope, or:	(no change)
Average existing setback for the block is less (17.06.040.D)	(no change)
	Except a garage/carport setback less than 10 ft. requires approval by the City Engineer
Except garage/carport must be at least 20 ft. from the far side of the street (17.34.020.B)	(delete)
Except garage/carport must be at must be at least 20 ft. from the property line (17.34.020.C)	(delete)

Similar concerns were raised regarding the recommended changes to the height limit for garages allowed to encroach within the standard front setback.

Currently, in the R-1 (BMC Section 17.06.040.060.G), R-2 (BMC Section 17.08.040.G) and R-3 (BMC Section 17.10.040.G) Districts, any structures within 15 ft. of the front property line (the standard front setback before any exceptions apply) cannot exceed 20 ft. in height, except that, on slopes of at least 20%, garages may be built to 15 ft. above the elevation of the center of the street, as long as they do not exceed the standard 30 ft. height limit. The requirements are similar in the R-BA District (BMC Section 17.12.040.G), except that the standard front setback is 20 ft. and the standard height limit is 35 ft. The intent of this height restriction is to minimize the visual impact of standard-setback encroachments upon the streetscape, while recognizing that garage height may be affected by driveway slope constraints (including the 20% slope limit per BMC Section 17.34.120).

The Planning Commission's recommended ordinance would expand the exception for garages to also allow them to exceed the 30 ft. height limit, as long as the garage does not exceed 15 ft. above the elevation of the center of the street and the height of any permitted living area underneath the garage does not exceed the 30 ft. height limit. Please see the attached diagrams to compare "tipping point" scenarios under the existing and recommended ordinances. The recommended ordinance would also clarify that the exception includes carports along with garages.

POSSIBLE COMPROMISE:

2. Guest Parking

The draft ordinance would require that additional guest parking spaces be provided for all residential subdivisions of 5 or more single-family residences and all developments of 5 or more multiple family dwelling units at the rate of 1 parking space for every 5 units, with no parking spaces required for fractional remainders (Section 17.34.020.A). The Subcommittee was split on whether fractional remainders should be counted as an additional required space. A possible compromise would be to eliminate ", with no parking spaces required for any fractional remainders" and allow Section 17.34.020.B.4 to apply, rounding up fractions for 0.5 to the next whole number. Thus, 1 guest space would be required for developments of 5 to 7 units, 2 guest spaces would be required for 8 to 12 units, etc.

Note the following clarifications that were recommended at the meeting of January 16, 2014:

17.34.020.A. ...Additional guest parking spaces shall be provided for all residential subdivisions of 5 (five) or more single-family residences, at the rate of 1 parking space for every 5 (five) units, with no parking spaces required for any fractional remainders. *Such spaces shall be located entirely within the public right-of-way and available for public use.* Any accessible parking spaces required per Section 17.34.040.D shall count as guest parking spaces.

17.34.030.D. Guest parking spaces *required for multiple family developments* shall be posted by the property owner as available for 72-hour maximum use by the guests only of all residential units for which they are required.

CONSENSUS:

1.b. Parking Exceptions

The Subcommittee agreed that the draft ordinance should be clarified as follows regarding the parking exception allowed for the minor expansion of existing dwellings under Section 17.34.050.B.

B. ~~An existing~~ *A* single-family dwelling or mobilehome *existing as of ____ [the date this section takes effect]* which does not have off-street parking facilities that conform with the requirements of this chapter may be expanded by a cumulative total of not more than four hundred (400) square feet of floor area without the need to bring the parking facilities into conformance or to obtain a use permit under Section 17.34.050.I of this chapter; furthermore, such a single-family dwelling or mobilehome may be expanded to a total floor area of not more than one-thousand two-hundred (1,200) square feet, if the total number of bedrooms does not exceed two. The following restrictions and requirements shall apply:

1. The structure to be expanded shall constitute the principal structure and the only dwelling unit located on the site or mobilehome park space.
2. The square footage permitted by this section shall be reduced by the square footage of any prior expansion of the same structure that was made since January 1, 1986, regardless of whether an exception, use permit, variance, or other approval was granted for such prior expansion.
3. The square footage permitted by this section shall be reduced by the square footage of any prior permitted expansion of the same structure which resulted in the loss of required parking spaces, such as the conversion of a garage to living area.
4. The expansion shall not result in the loss of any existing required off-street parking spaces that would increase the nonconformity of the existing off-street parking facilities.
5. The proposed development shall comply with the requirements of Section 17.01.060 of this title, unless: (a) the structure to be expanded is located upon a lot of record, and (b) a public street abutting such lot of record provides the principal means of access to that lot.
6. The total floor area shall not exceed the maximum permitted under the floor area ratio regulations for the applicable district, including or excluding covered parking as provided under those regulations.
7. See Section 17.34.020.B.1 regarding garage and carport exclusions from the floor area calculation.

4. Parking Requirement Tiers

The Subcommittee agreed to abide by the Planning Commission's recommendation that the current parking requirements not be increased for larger homes, since the ordinance should be specifically focused on achieving the 2015-2022 Housing Element's Goal H.I. to "avoid

unreasonable government constraints to the provision of housing" by following Housing Element Program H.I.1.c's approach to encourage smaller, more affordable units.

5. On-Site Turnaround

The Subcommittee agreed to specify by name those streets where new parking facilities would be required to designed so as not to have cars backing into traffic (Section 17.34.040.I). Existing buildings would be exempt from this requirement per Section 17.34.050.A, which would be cross-referenced in this section.

I. On-site turnaround. 1. Off-street parking facilities shall be designed to provide on-site turnaround capability~~, with the following exceptions:~~

~~a. The parking spaces~~ for a single-family residence, secondary dwelling unit or duplex ~~may be designed to back into a non-~~ *with driveway access on any* arterial street *including but not limited to Bayshore Boulevard or Guadalupe Canyon Parkway.*

~~b. The parking spaces~~

2. Off-street parking facilities shall be designed to provide on-site turnaround capability for a complex of three or more units *with driveway access on any* ~~may be designed to back into a local street that is not an~~ arterial or ~~a~~ collector street, *including but not limited to Bayshore Boulevard, Guadalupe Canyon Parkway, Old County Road, San Bruno Avenue or that portion of Visitacion Avenue within the NCRO-2 District.*

3. ~~2.~~ On-site turnaround capability shall be designed so as not to conflict with required parking spaces, including any recognized tandem spaces.

4. Dwelling units existing as of __ [the date this section takes effect] shall be exempt from this requirement per Section 17.34.050.A.

NO CONSENSUS:

1.a. Bedrooms

The Subcommittee was divided as to whether bedrooms should be used as a basis for parking requirements, if the term were not defined in the ordinance. The Municipal Code currently uses number of bedrooms as the basis for parking requirements for duplexes and multi-family dwellings. The recommended ordinance would also add studio or 1-bedroom single-family dwellings not more than 900 sq. ft. in floor area and two-or-more-bedroom secondary dwelling units to this list (the parking requirements for all other dwellings would be based upon floor area). Given the difficulties in attempting to define "bedroom," the Planning Commission had recommended instead that the City continue to rely upon past practice in identifying bedrooms based upon the layout of rooms and typically the presence of a closet and an exterior window (required by the California Building Code for escape/rescue for "sleeping accommodations").

Attachments:

Minimum Garage Dimensions versus Height Limit Cross-Section
Comparison of Scenarios under the Existing and Recommended Ordinances
Redline Version of Draft Ordinance No. 576 (NOT INCLUDED)
11/6/13, 1/16/14 & 3/26/14 Subcommittee Reports (NOT INCLUDED)

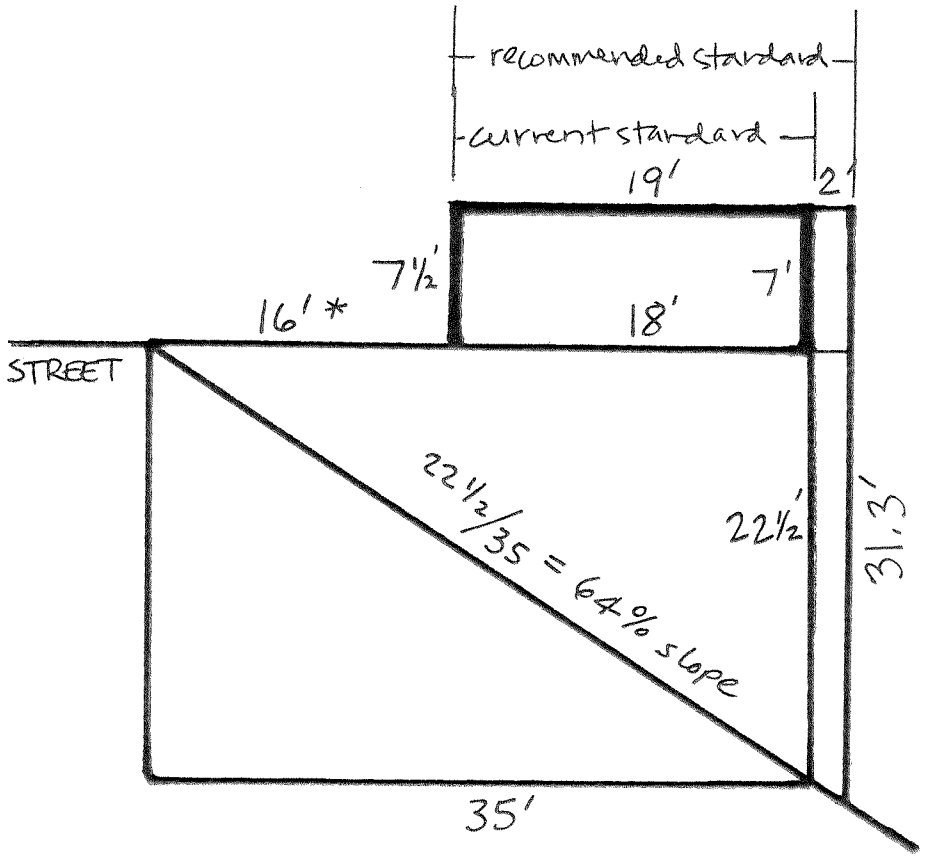

*compact driveway (17.34.040.C)
encroaching into right-of-way (17.34.050.H)

MINIMUM GARAGE DIMENSIONS VS. HEIGHT LIMIT
CROSS-SECTION

On a ±30% slope, a ±10' tall garage set back as far as 15' from the front property line can fit under the 30' height limit.

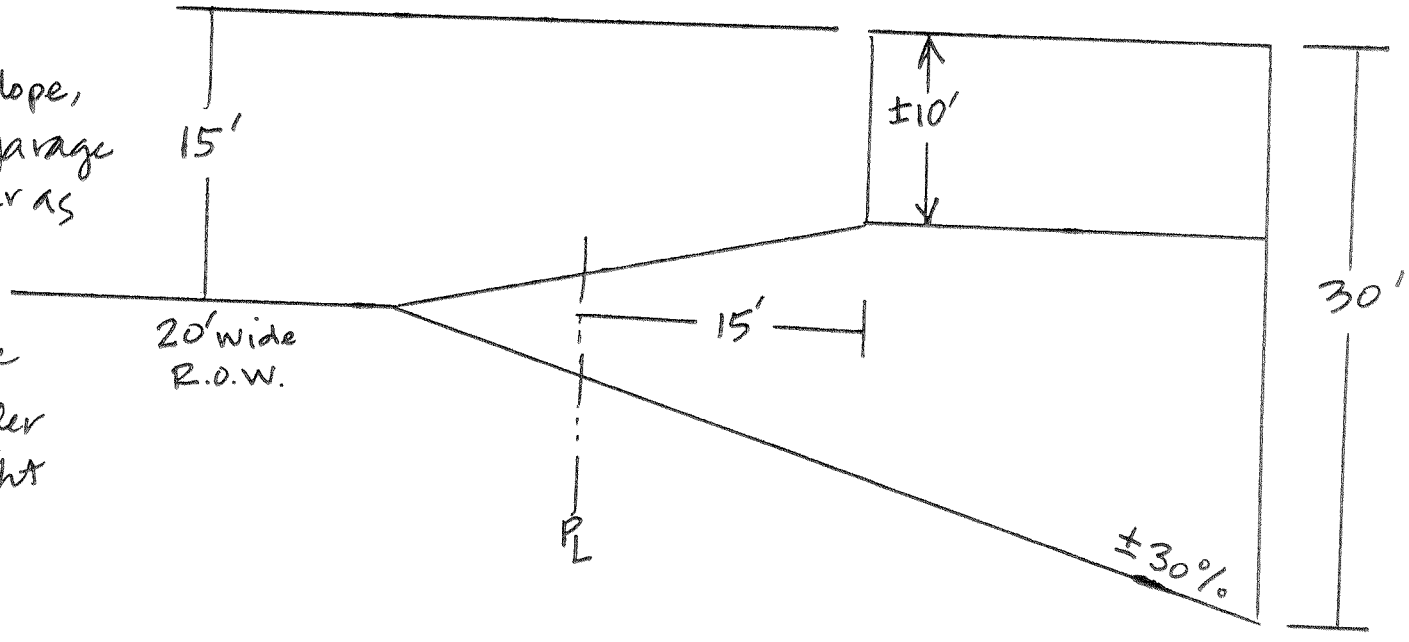

The steeper the site, the more the garage would have to be shifted forward (and the driveway shortened) to stay under the 30' height limit.

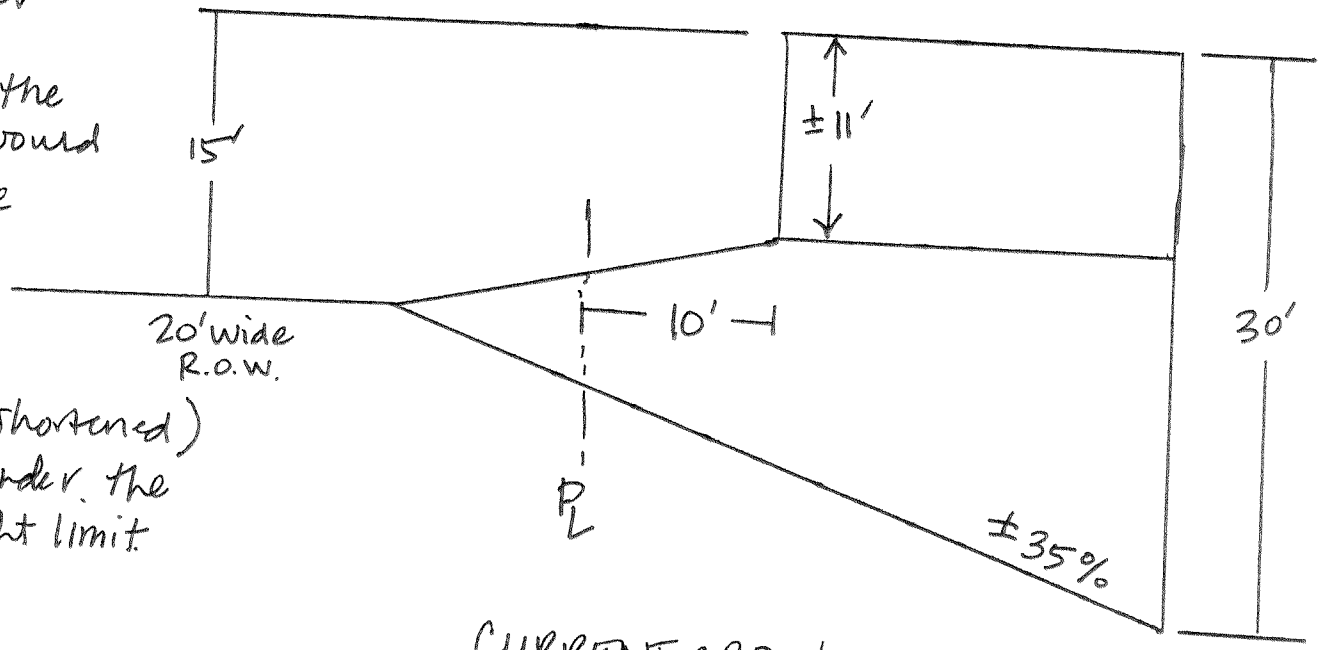

Assumptions:
- 20' wide improved street centered within 40' wide right-of-way
- 20% maximum slope driveway
- 21' long garage

CURRENT ORDINANCE

COMPARISON OF SCENARIOS FOR GARAGE HEIGHT
#1

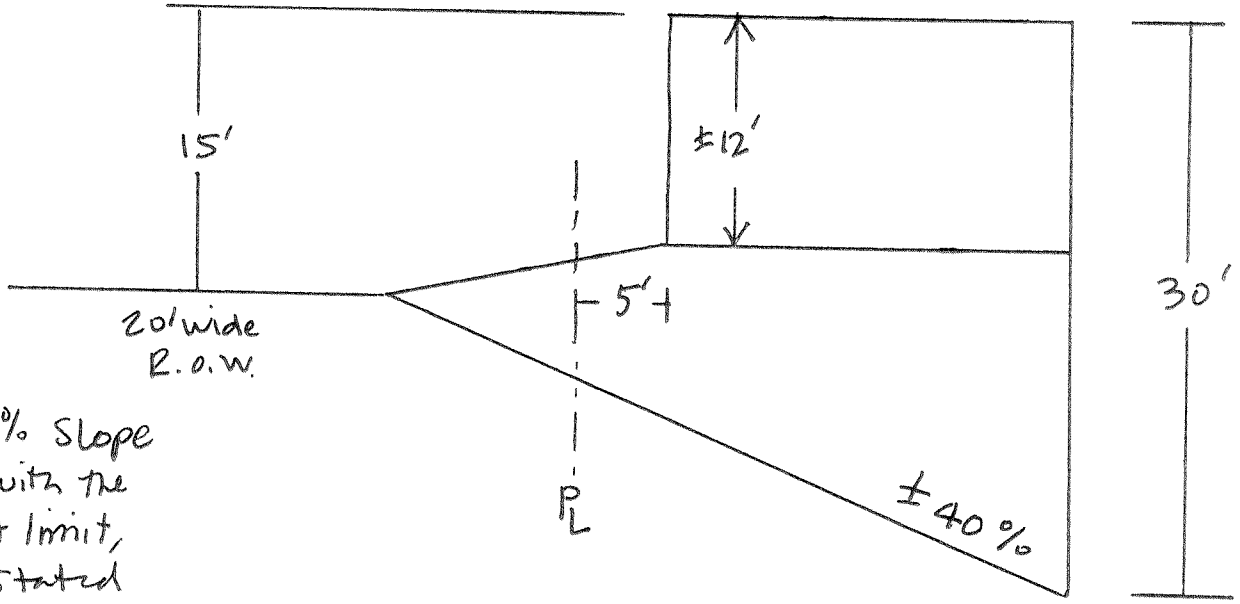

On a ±50% slope to comply with the 30' height limit, given the stated assumptions, the garage would have to be set at the front property line.

To provide a longer driveway, its slope would have to be reduced. On even steeper slopes, the driveway slope might have to be reversed, so that it drops below street level.

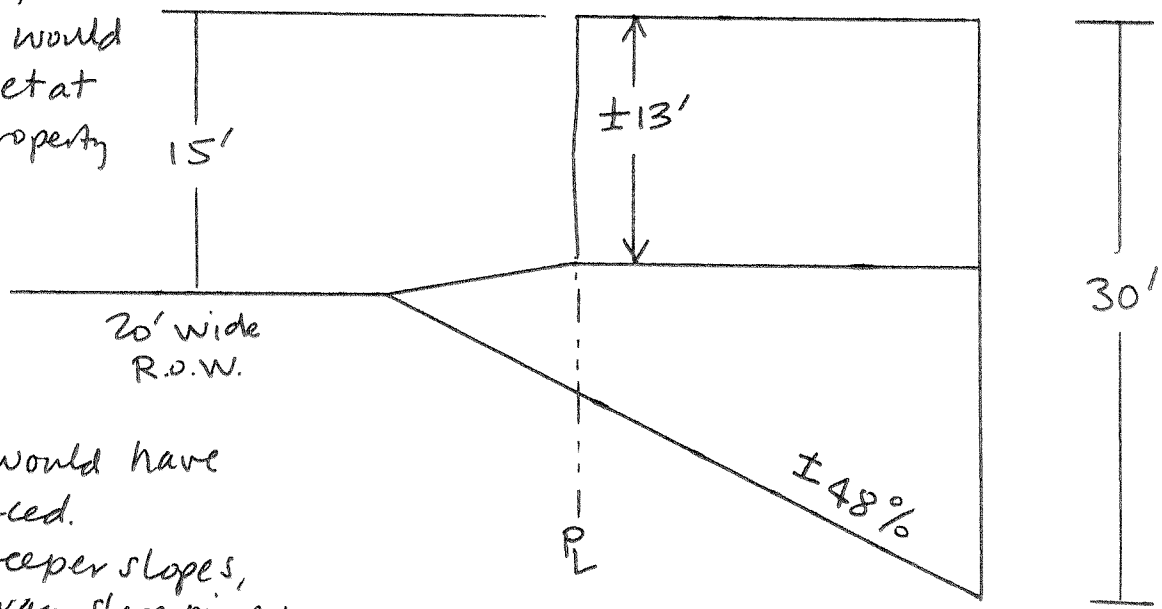

CURRENT ORDINANCE

Assumptions:
- 20' wide improved street centered within 40' wide right-of-way
- 20% maximum slope driveway
- 21' long garage

COMPARISON OF SCENARIOS FOR GARAGE HEIGHT

#1

With the current garage height limit of 15' above the center of the street and the recommended exception to the 30' overall height limit for garages, a 10' tall garage can be accommodated on slopes steeper than 50% with the living area immediately beneath complying with the 30' overall height limit.

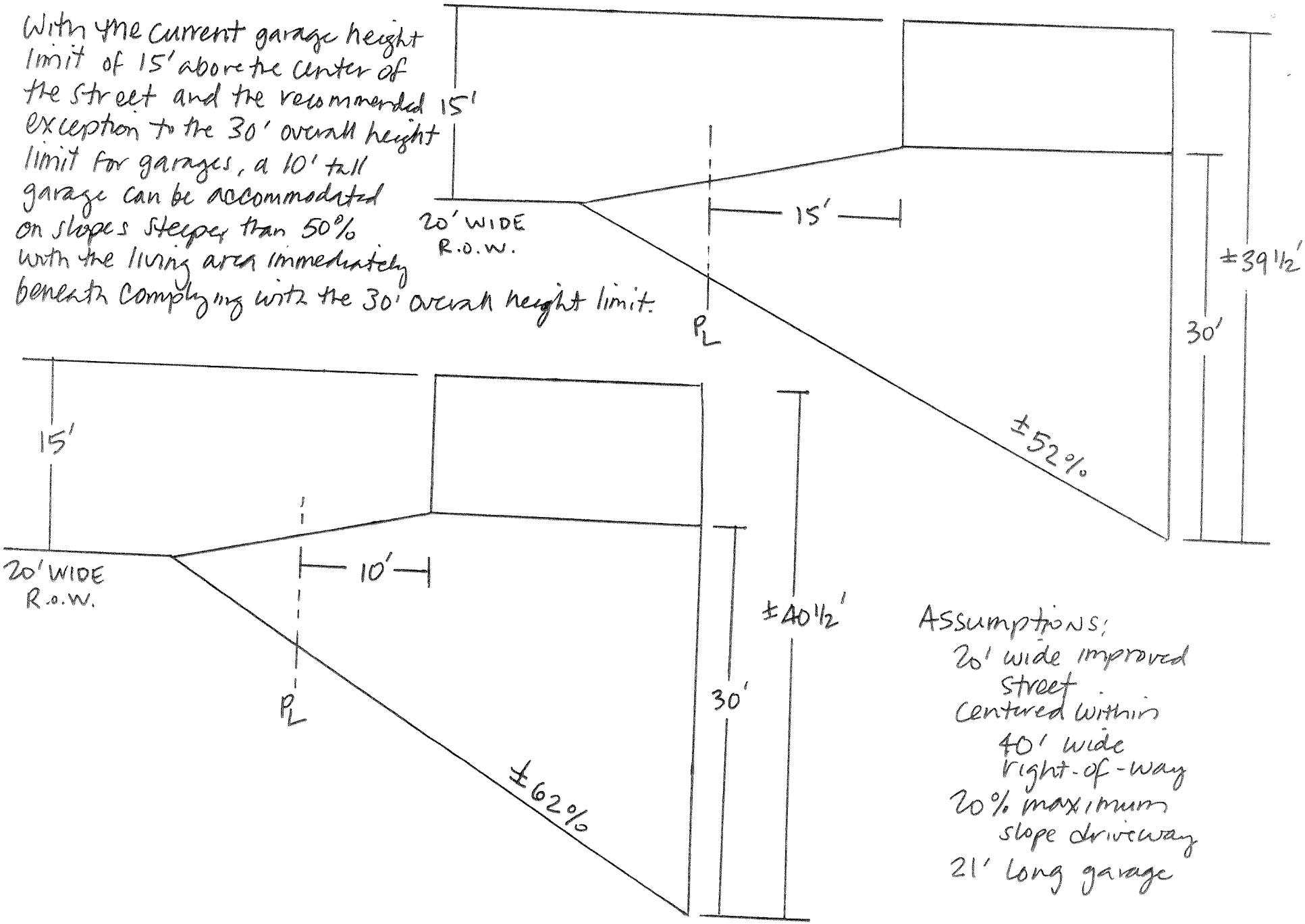

Assumptions:
- 20' wide improved street centered within 40' wide right-of-way
- 20% maximum slope driveway
- 21' long garage

RECOMMENDED ORDINANCE
COMPARISON OF SCENARIOS FOR GARAGE HEIGHT
#2

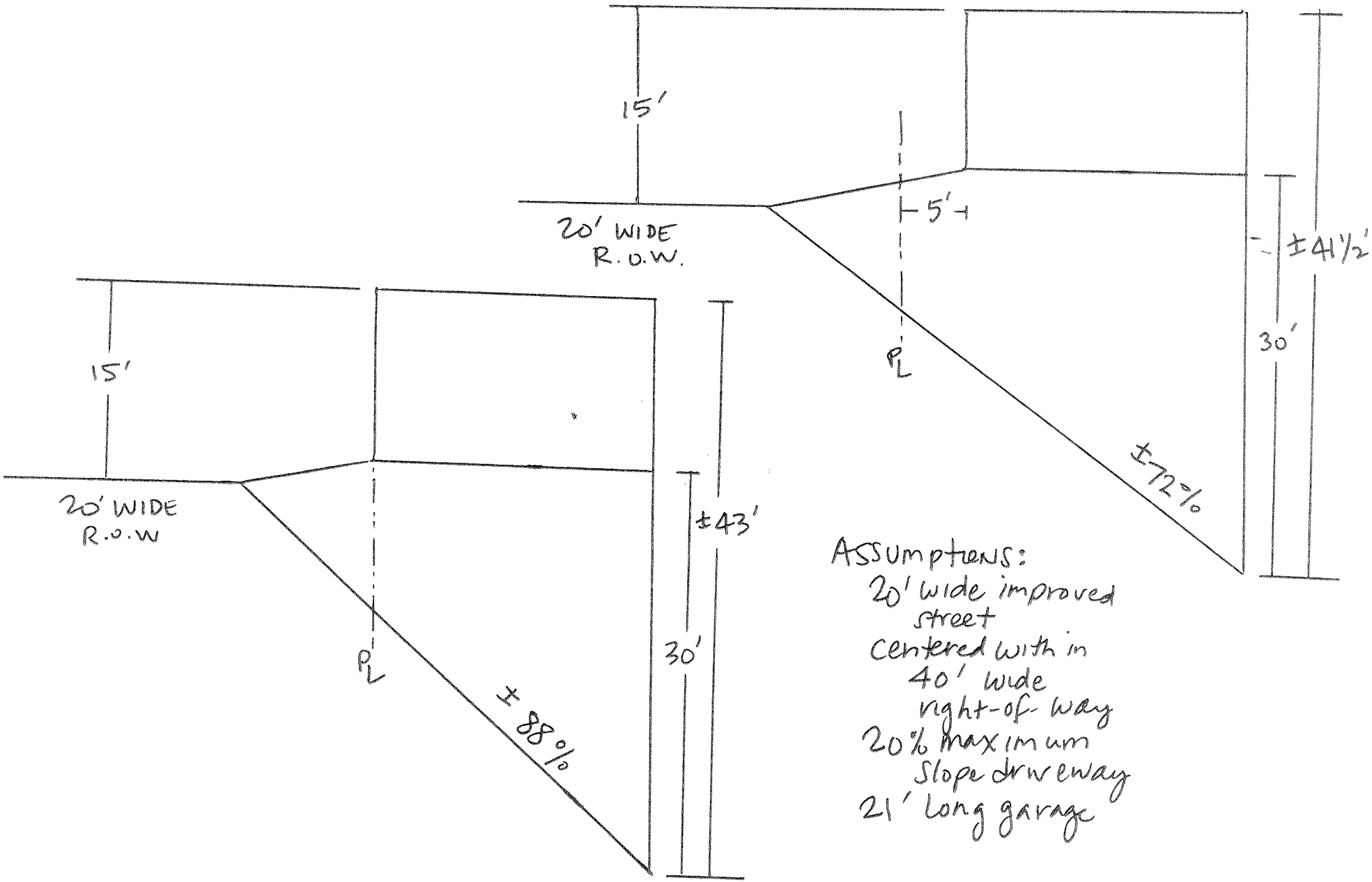

ASSUMPTIONS:
- 20' wide improved street centered with in 40' wide right-of-way
- 20% maximum slope driveway
- 21' long garage

RECOMMENDED ORDINANCE
COMPARISON OF SCENARIOS FOR GARAGE HEIGHT
#4

City of Brisbane
Subcommittee Report

TO: Mayor O'Connell and City Councilmember Liu

FROM: Community Development Director and Special Assistant

SUBJECT: Ordinance No. 576 (Zoning Text Amendment RZ-5-11) to Amend Brisbane Municipal Code Title 17 Regarding Garage/Carport Minimum Setbacks and Height Limits in the R Residential Districts, Off-Street Parking Regulations, and Alteration/Expansion of Nonconforming Structures

DATE: July 17, 2015

The following is a draft summary of the Subcommittee's recommendations that would be incorporated into the agenda report for the City Council's public hearing on the proposed zoning text amendment. Also attached is an annotated redline version of draft Ordinance No. 576, illustrating the changes recommended by the Subcommittee. Also provided is follow-up information regarding garage exceptions to the front setback requirements and floor area ratio limits.

The purpose of this memo is to ensure that staff has accurately captured the Subcommittee's recommendations for purposes of scheduling this matter for consideration by the City Council. No further Subcommittee meetings are scheduled, unless either of you would like to meet for further discussion, in which case a follow-up Subcommittee meeting will be scheduled.

SUBCOMMITTEE'S RECOMMENDATIONS:

The City Council's Planning Issues Ad Hoc Subcommittee met four times, concluding that the following changes should be made in the draft ordinance recommended by the Planning Commission—

Garage Height Limits

The Subcommittee recommends elimination of the proposed changes to the Height of Structures Development Regulations for the R-1, R-2, R-3 and R-BA Districts (Sections 17.06.040.G.2, 17.08.040.G.2, 17.10.040.G.2 & 17.12.040.D.2.b) that would expand the exception for garages to allow them to exceed the 30 ft. height limit, as long as the garage does not exceed 15 ft. above the elevation of the center of the street and the height of any permitted living area underneath the garage does not exceed the 30 ft. height limit. Instead, the Subcommittee finds that the existing Variance procedure should continue to be used on a case by case basis to consider such height

limit exceptions. This would allow adjoining property owners, particularly those located below and to the rear, to provide input through the public hearing process.

Guest Parking

The draft ordinance would require that additional guest parking spaces be provided for all residential subdivisions of 5 or more single-family residences and all developments of 5 or more multiple family dwelling units at the rate of 1 parking space for every 5 units, with no parking spaces required for fractional remainders (Section 17.34.020.A). The Subcommittee recommends that fractional remainders should be rounded up from 0.5, as provided in Section 17.34.020.B.4. Thus, 1 guest space would be required for developments of 5 to 7 units, 2 guest spaces would be required for 8 to 12 units, etc. (instead of 1 guest space for 5 to 9 units, 2 guest spaces for 10 to 14 units, etc.). The Subcommittee also recommends that the guest parking requirement for residential subdivisions in Section 17.34.020.A specify that such spaces be located entirely within the public right-of-way so as to be available for general public use. Section 17.34.030 is also recommended to be clarified as applying only to guest parking spaces required for multiple family developments.

On-Site Turnaround

The Subcommittee recommends that those streets where new parking facilities would be required to designed so as not to have cars backing into traffic be specified by name, in addition to by classification as arterial or collector street (Section 17.34.040.I). An additional subsection would be added to note that dwellings existing as of the date the ordinance takes effect would be exempt from this requirement per Section 17.34.050.A.

Parking Exceptions

The Subcommittee recommends that Section 17.34.050.B be clarified by referencing the date the ordinance takes effect as the date by which a single-family dwelling or mobilehome is considered to be "existing" and thus qualified for the parking exception allowed for the minor expansion of existing dwellings under this section.

FOLLOW-UP INFORMATION

Garage Setbacks

Under the current Zoning Ordinance, on blocks in the R-1, R-2 and R-3 Districts where the average existing setback is less than the standard, the required setback for single-family dwellings may be reduced to that average (BMC Sections 17.06.040.D.2, 17.08.040.D.1.b & 17.10.040.D.1.b), as long as that is not closer than 20 ft. to the far side of the improved street (BMC Section 17.34.020.B) or front property line (BMC Section 17.34.020.C). Under the recommended ordinance, to reduce the setback for garages or carports to less than 10 ft. would require the City Engineer to determine that the lesser distance is safe in terms of pedestrian and vehicular traffic (similar to current BMC Sections 17.32.050.A.1.a & 17.32.070.A.3.a). This change would only affect those few instances in which the average existing setback for the block

is less than 10 ft., the garage is not proposed to be set back at least 10 ft. to provide driveway parking, and the floor area of the house is less than 1,800 sq. ft. (for which proposed Section 17.34.020.A would require only 1 to 2 parking spaces, which could be provided within a garage).

Attached are the administrative procedures for calculating the average existing front setback by block and a current accounting of average setbacks calculated by block. Forty-three of these blocks have an average setback of less than 10 ft. Within these blocks, there are 90 building sites no more than 2,500 sq. ft. in area, which would be restricted to building a house no more than 1,800 sq. ft. in floor area per BMC Section 17.06.040.F. This is less than 10% of all of the single-family dwellings in Brisbane. Thus, the number of instances in which the City Engineer would be called upon to make a determination under the proposed ordinance would not appear to be significant.

Floor Area Ratio Exclusions

The 1999-2006 Housing Element's Program H4a(2) directed the City to "Adopt floor area ratio standards that encourage affordable multi-family development in the R-2 and R-3 Districts" with the purpose of avoiding unnecessary constraints upon multi-family development.

In 2002, BMC Section 17.06.040.F adopted via Ordinance No. 463 stated, "The maximum floor area ratio for all buildings on a lot shall be 0.72 [in the R-1 District]. Up to two covered parking spaces designed to accommodate full-size automobiles, not exceeding a total area of 400 square feet, shall be excluded from the calculation of floor area." Similar requirements applied to the R-2 and R-3 Districts, even though those districts allowed proportionately higher dwelling unit density and lot coverage.

In 2003, while updating the secondary dwelling unit regulations, the City Council raised concerns regarding the visual impact of floor area ratio exceptions for required covered parking, which were subject to further study.

As a result, Ordinance No. 485 was adopted in 2004, revising BMC Section 17.06.040.F to read, "The maximum floor area ratio for all buildings on a lot shall be 0.72. Where the size of the lot is three thousand seven hundred (3,700) square feet or less, one covered parking space shall be excluded from the calculation of floor area ratio; provided, however, such exclusion shall not exceed a total area of two hundred (200) square feet." For larger sites, all covered parking would be included in determining compliance with the floor area ratio limit. Similar revisions were adopted for single-family dwellings in the R-2 and R-3 Districts, but the 400 sq. ft. exclusion continued to apply to duplexes and multiple-family dwellings, consistent with the Housing Element, so as not to unnecessarily constrain multi-family development.

Attachments:

Annotated Redline Version of Draft Ordinance No. 576 (NOT INCLUDED)
Average Existing Front Setback
Average Front Setbacks Calculated

USE PERMITS TO MODIFY THE PARKING REGULATIONS
GRANTED BY THE PLANNING COMMISSION
SINCE ADOPTION OF PLANNING COMMISSION RESOLUTION RZ-9-03
(5/27/04)

FILE NO.: UP-2-04
ADDRESS: 432 Klamath
PROPOSAL: increase second unit from 640 sq. ft. to 1,000 sq. ft., reduce floor area of primary unit by 400 sf
NUMBER: 6 required; 6 accepted
SIZE: 4 standard + 2 compact
LOCATION: 2 garage, 2 driveway (three-in-tandem) + 2 on/off-street
OUTCOME: PC approved 4/22/04 (after having initially denied it 3/11/04)

FILE NO.: UP-5-04
ADDRESS: 325-329 Mendocino
PROPOSAL: 155 gross interior sf addition (two interior stairways to connect upper & lower floors of nonconforming duplex units)
NUMBER: 3 garage spaces required; 2 garage + 3 driveway spaces accepted
SIZE: 4 standard + 1 compact
LOCATION: 2 garage, 3 driveway (side by side)
OUTCOME: PC approved 4/22/04

FILE NO.: UP-13-04
ADDRESS: 280 Klamath
PROPOSAL: reconfigure existing nonconforming duplex
NUMBER: 2 garage and 1 off-street required; 1 garage and 3 off-street accepted
SIZE: 4 standard
LOCATION: 1 garage, 3 driveway
OUTCOME: PC approved 9/9/04

FILE NO.: UP-15-04
ADDRESS: 118 Santa Clara
PROPOSAL: Conditions limited approval to 517 gross interior sf addition (up to 3,600 sq. ft. total)
NUMBER: 4 required; 4 accepted
SIZE: 2 standard garage, 1 standard on-street + 1 compact on-street
LOCATION: 2 garage, 2 on-street as striped (street less than 28 ft. wide)
OUTCOME: PC conditionally approved 9/23/04

FILE NO.: UP-21-04
ADDRESS: 164 San Benito
PROPOSAL: 1,435 gross interior sf addition (including new garage and covered front deck and expanded basement)
NUMBER: 3 required; 2 accepted
SIZE: 1 standard + 1 compact
LOCATION: 1 garage, 1 driveway
OUTCOME: PC approved 3/24/05 on condition that rear deck be cantilevered (to eliminate covered rear patio) and basement ceiling height be reduced to <6 ft. ("living area" reduced to less than 1,800 sq. ft.)

FILE NO.: UP-2-05
ADDRESS: 221 Tulare Street
PROPOSAL: 900 gross interior sf addition (demolishing 340 sq. ft. existing)
NUMBER: 4 required; 3 accepted
SIZE: 3 standard (including 1 parallel)
LOCATION: 2 on/off-street driveway, 1 on/off-street parallel
OUTCOME: PC approved 10/27/05

FILE NO.: UP-5-05
ADDRESS: 15 Glen Parkway & 720 San Bruno Avenue
PROPOSAL: 1,059 sq. ft. total each
NUMBER: 4 required; 4 accepted
SIZE: 4 standard each
LOCATION: 1 garage, 3 driveway each
OUTCOME: PC approved 7/28/05

FILE NO.: UP-6-05
ADDRESS: 462 Kings Road
PROPOSAL: new house with floor area not over 2,700 sq. ft.
NUMBER: 4 required; 4 accepted
SIZE: 2 standard + 2 compact
LOCATION: 2 garage, 2 in private easement on-site
OUTCOME: PC approved 11/10/05

FILE NO.: UP-7-05
ADDRESS: 466 Kings Road
PROPOSAL: new house with floor area not over 2,700 sq. ft.
NUMBER: 4 required; 4 accepted
SIZE: 2 standard + 2 compact
LOCATION: 2 garage, 2 in private easement off-site
OUTCOME: PC approved 11/10/05

FILE NO.: UP-16-05

ADDRESS: 1 Mariposa
PROPOSAL: 690 gross interior sf addition to 418 sq. ft. house
NUMBER: 4 required; 2 accepted (plus 2 across street to be widened)
SIZE: 1 standard + 1 compact
LOCATION: 1 garage, 1 driveway
OUTCOME: PC approved 11/10/05

FILE NO.: UP-17-05
ADDRESS: 296 Humboldt
PROPOSAL: 224 gross interior sf addition, increased total to 1,830 sq ft (excluding covered deck and garage)
NUMBER: 4 required; 3 accepted
SIZE: 2 standard + 1 compact
LOCATION: 2 garage, 1 side driveway
OUTCOME: PC approved 12/1/05

FILE NO.: UP-19-05
ADDRESS: 240 Sierra Point Road
PROPOSAL: 461.5 gross interior sf addition (not including garage), 1,523 sq. ft. total (not including garage)
NUMBER: 3 required; 2 accepted
SIZE: 2 standard
LOCATION: 2 garage
OUTCOME: PC approved 12/1/05

FILE NO.: UP-6-06
ADDRESS: 529 Visitacion
PROPOSAL: 574 net gross interior sf addition (excluding 200 sq. ft. of garage)
NUMBER: 3 required; 2 accepted
SIZE: 1 standard + 1 compact
LOCATION: 1 garage, 1 driveway
OUTCOME: PC approved 7/27/06

FILE NO.: UP-7-06
ADDRESS: 425-429 Sierra Point Road
PROPOSAL: 500 gross interior sf conversion of former garage into living space
NUMBER: 3 garages required; 4 off-street spaces accepted
SIZE: 4 compact
LOCATION: 4 side-by-side spaces in 2 driveway parking decks
OUTCOME: PC approved 8/10/06

FILE NO.: UP-8-06
ADDRESS: 90 San Benito
PROPOSAL: 708 gross interior sf addition (excluding 200 sq. ft. of garage and excluding basement with <6' clearance)
NUMBER: 4 required; 3 accepted
SIZE: 2 standard + 1 compact
LOCATION: 2 garage, 1 driveway (parallel to street)
OUTCOME: PC approved 12/14/06 (renewed 5/13/10 as UP-8-10)

FILE NO.: UP-10-06
ADDRESS: 280 Monterey
PROPOSAL: 1,116 gross interior sf addition
NUMBER: 4 required; 4 accepted
SIZE: 3 standard + 1 compact
LOCATION: 1 garage, 2 driveway, 1 on/off-street
OUTCOME: PC approved 9/14/06

FILE NO.: UP-14-06
ADDRESS: 245 San Benito
PROPOSAL: 724 sq. ft. secondary dwelling unit
NUMBER: 6 required; 6 accepted
SIZE: 2 standard + 3 compact + 1 subcompact (1 compact + 1 subcompact for second unit)
LOCATION: 2 garage, 2 driveway, 2 in new driveway in front yard
OUTCOME: PC approved 2/22/07

FILE NO.: UP-1-07
ADDRESS: 418-420 Monterey St
PROPOSAL: duplex with 2-car garage and 2-car driveway instead of 3-car garage
NUMBER: 3 required; 5 accepted
SIZE: 3 standard
LOCATION: 3 garage
OUTCOME: PC required garage be revised to contain 3 spaces 5/24/07

FILE NO.: UP-7-07
ADDRESS: 455 Alvarado Street
PROPOSAL: 2,304 gross interior sf primary dwelling unit, 955 sq. ft. secondary dwelling unit
NUMBER: 6 required; 5 accepted
SIZE: 2 standard + 3 compact (smaller than Caltrans standard for parallel parking)
LOCATION: 2 garage, 3 parallel on/off-street
OUTCOME: PC approved 6/28/07

FILE NO.: UP-6-09
ADDRESS: 248 Monterey
PROPOSAL: Dwelling Group

NUMBER: 4 required; 4 accepted
SIZE: 2 standard + 2 compact
LOCATION: 2 garage, 2 driveway on-site (plus 2 parallel off-street spaces)
OUTCOME: PC approved 4/23/09

FILE NO.: UP-9-09 (renewal of UP-3-07)
ADDRESS: 661 San Bruno Avenue
PROPOSAL: New 4-unit condo project
NUMBER: 6 required; 6 accepted with less than standard aisle width for 3 spaces
SIZE: 3 standard + 3 compact
LOCATION: 6 garage; 2 on-street
OUTCOME: PC approved 5/14/2009

FILE NO.: UP-12-09
ADDRESS: 340 Kings Road
PROPOSAL: Convert 300 sq. ft. of existing 1,600 sq. ft. SFR into SDU
NUMBER: 6 required; 4 accepted
SIZE: 2 standard + 2 compact
LOCATION: 2 garage, 2 driveway
OUTCOME: PC approved 6/25/09

FILE NO.: UP-6-10
ADDRESS: 110 Solano Street
PROPOSAL: primary/secondary dwelling units conversion
NUMBER: 5 required; 4 accepted
SIZE: 4 standard
LOCATION: 4 garage
OUTCOME: PC approved 4/22/10

FILE NO.: UP-9-10 (renewal of UP-9-09)
ADDRESS: 661 San Bruno Avenue
PROPOSAL: New 4-unit condo project
NUMBER: 6 required; 6 accepted with less than standard aisle width for 3 spaces
SIZE: 3 standard + 3 compact
LOCATION: 6 garage; 2 on-street
OUTCOME: PC approved 6/10/2010

FILE NO.: UP-14-11
ADDRESS: 462 and 466 Kings Road
PROPOSAL: 2 new single-family homes
NUMBER: On-site: 2 covered required per home; 2 covered accepted. 4 off-site spaces approved within Alexander Road easement
SIZE: 2 standard + 2 compact per home
LOCATION: 2 garage + 2 uncovered in easement per home
OUTCOME: PC approved 8/25/11

FILE NO.: UP-5-14
ADDRESS: 875 Humboldt Rd
PROPOSAL: New single-family home with attached secondary dwelling unit
NUMBER: 4 on-site spaces required; 3 accepted + 3 off-street
SIZE: On-site: 2 standard + 1 compact; Off-street: 3 standard
LOCATION: On-site: 2 garage, 1 driveway; Off-street: 3 in driveway
OUTCOME: PC approved 2/26/2015